Part Number: MERAKI COMPATIBLE MA-QSFP-40G-SR4
MERAKI COMPATIBLE MA-QSFP-40G-SR4-IND

MERAKI COMPATIBLE MA-QSFP-40G-SR4 Quick Spec:

Form Factor:	QSFP
TX Wavelength:	850nm
Reach:	150m
Cable Type:	MMF
Rate Category:	40GBase
Interface Type:	SR4
DDM:	Yes
Connector Type:	MPO
Optical Power Budget:	1.9dB
TX Power Min/Max:	-7.6 to +2.4 dBm
RX Power Min/Max:	-9.5 to 2.4 dBm

MERAKI COMPATIBLE MA-QSFP-40G-SR4 Product Features

- 4 independent full-duplex channels, up to 11.2Gbps data rate per channel
- MTP/MPO optical connector
- QSFP+ MSA compliant
- Digital diagnostic capabilities
- Capable of over 100 m transmission on OM3 multi-mode ribbon fiber
- CML compatible electrical I/O
- Power Dissipation < 1.5W
- Single +3.3V power supply
- XLPPI electric interface (with 1.5W Max power)
- RoHS-6 compliant
- Operating case temperature:
  - Standard 0 to 70°C
  - Industrial -40 to +85 °C

MERAKI COMPATIBLE MA-QSFP-40G-SR4 Applications

- Rack to rack, data center
- 40G Ethernet, Infiniband QDR, DDR and SDR

MERAKI COMPATIBLE MA-QSFP-40G-SR4 Overview

The MA-QSFP-40G-SR4 is a parallel 40Gbps Quad Small Form-factor Pluggable (QSFP+) optical module. It provides increased port density and total system cost savings. The QSFP+ full-duplex optical module offers 4 independent transmit and receive channels, each capable of 10Gbps operation for an aggregate data rate of 40Gbps over 100 meters of OM3 multi-mode fiber. An optical fiber ribbon cable with an MPO/MTPTM connector can be plugged into the QSFP+ module receptacle. Proper alignment is ensured by the guide pins inside the receptacle. Electrical connection is achieved through a z-pluggable 38-pin IPASS® connector. The module operates via a single +3.3V power supply. LVCMOS/LVTTL global control signals, such as Module Present, Reset, Interrupt and Low Power Mode, are available with the modules. A 2-wire serial interface is available to send and receive more complex control signals, and to receive digital diagnostic information. Individual channels can be addressed and unused channels can be shut down for maximum design flexibility. The MA-QSFP-40G-SR4 is designed with form factor, optical/electrical connection and digital

diagnostic interface according to the QSFP+ Multi-Source Agreement (MSA). It has been designed to meet the harshest external operating conditions including temperature, humidity and EMI interference. The module offers very high functionality and feature integration, accessible via a two-wire serial interface.

MERAKI COMPATIBLE MA-QSFP-40G-SR4 Functional Diagram

The MA-QSFP-40G-SR4 converts parallel electrical input signals into parallel optical signals, by a driven Vertical Cavity Surface Emitting Laser (VCSEL) array. The transmitter module accepts electrical input signals compatible with Common Mode Logic (CML) levels. All input data signals are differential and internally terminated. The receiver module converts parallel optical input signals via a photo detector array into parallel electrical output signals. The receiver module outputs electrical signals are also voltage compatible with Common Mode Logic (CML) levels. All data signals are differential and support a data rates up to 10 Gbps per channel. Figure 1 shows the functional block diagram of the TR-QQ85S-N00 QSFP+ Transceiver. A single +3.3V power supply is required to power up the module. Both power supply pins VccTx and VccRx are internally connected and should be applied concurrently. As per MSA specifications the module offers 7 low speed hardware control pins (including the 2-wire serial interface): ModSelL, SCL, SDA, ResetL, LPMode, ModPrsL and IntL

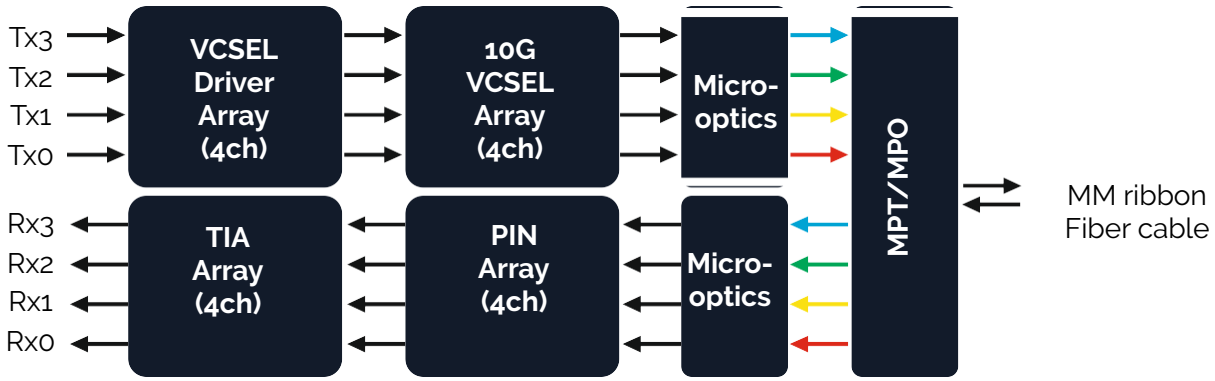

Figure 1. Functional diagram

Module Select (ModSelL) is an input pin. When held low by the host, the module responds to 2-wire serial communication commands. The ModSelL allows the use of multiple QSFP+ modules on a single 2-wire interface bus – individual ModSelL lines for each QSFP+ module must be used. Serial Clock (SCL) and Serial Data (SDA) are required for the 2-wire serial bus communication interface and enable the host to access the QSFP+ memory map. The ResetL pin enables a complete module reset, returning module settings to their default state, when a low level on the ResetL pin is held for longer than the minimum pulse length. During the execution of a reset the host shall disregard all status bits until the module indicates a completion of the reset interrupt. The module indicates this by posting an IntL (Interrupt) signal with the Data_Not_Ready bit negated in the memory map. Note that on power up (including hot insertion) the module should post this completion of reset interrupt without requiring a reset. Low Power Mode (LPMode) pin is used to set the maximum power consumption for the module in order to protect hosts that are not capable of cooling higher power modules, should such modules be accidentally inserted. Module Present (ModPrsL) is a signal local to the host board which, in the absence of a module, is normally pulled up to the host Vcc. When a module is inserted into the connector, it completes the path to ground though a resistor on the host board and asserts the signal. ModPrsL then indicates a module is present by setting ModPrsL to a "Low" state. Interrupt (IntL) is an output pin. Low indicates a possible module operational fault or a status critical to the host system. The host identifies the source of the interrupt using the 2-wire serial interface. The IntL pin is an open collector output and must be pulled to the Host Vcc voltage on the Host board.

Absolute Maximum Ratings

Parameter	Symbol	Min	Max	Unit
Storage Temperature	*Ts*	-40	+85	°C
Power Supply Voltage	Vcc	-0.5	3.6	V
Input Voltage)	V_{IN}	-0.5	V_{cc}	V
Damage Threshold, each Lane	*THd*	2.4		dBm

Recommended Operating Conditions

Parameter	Symbol	Min	Typ	Max	Unit
Operating Case Temp (Standard)	*TOP*	0		70	°C
Operating Case Temp (Industrial)	*TOP*	-40		85	°C
Power Supply Voltage	*Vcc*	3.1	3.3	3.5	V
Baud Rate			10.3125	11.2	Gb/s
Link Distance with OM3 MMF	D			100	m
Link distance with OM4 MMF	D			150	m

Recommended Power Supply Filter

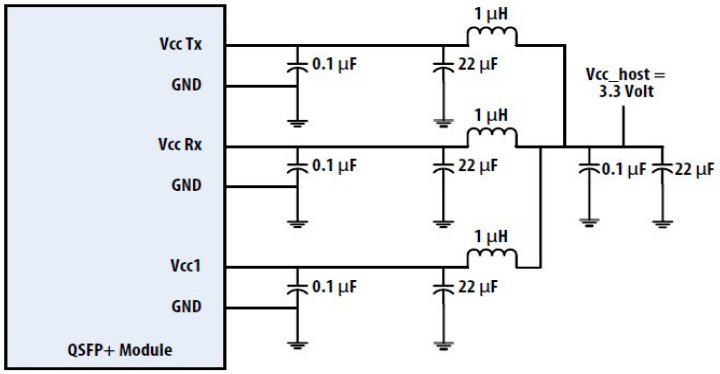

Electrical Characteristics

Parameter	Symbol	Min	Typ	Max	Unit
Power Consumption		0		1.5	W
Supply Current	*Icc*			350	mA

Electrical Characteristics – Transmitter (each lane)

Parameter	Symbol	Min	Typ	Max	Unit	Notes
Single-ended Input Voltage Tolerance (Note 2)		-0.3		4.0	V	Referred to TP1 signal common
AC Common Mode Input Voltage Tolerance (RMS)		15			mV	RMS
Differential Input Voltage Swing Threshold		50			mVpp	LOSA Threshold
Differential Input Voltage Swing	$V_{in,pp}$	190		700	mVpp	
Differential Input Impedance	Z_{in}	90	100	110	Ω	
Differential Input Return Loss		See IEEE 802.3ba 86A.4.1.1			dB	10MHz - 11.1GHz
J2 Jitter Tolerance	Jt_2	0.17			UI	
J9 Jitter Tolerance	Jt_9	0.29			UI	
Data Dependent Pulse Width Shrinkage (DDPWS) Tolerance		0.07			UI	
Eye Mask Coordinates {X1, X2, Y1, Y2}		0.11, 0.31 95, 350			UI mV	

Electrical Characteristics – Receiver (each lane)

Parameter	Symbol	Min	Typ	Max	Unit	Notes
Single-ended Output Voltage Threshold		-0.3		4.0	V	Referred to signal common
AC Common Mode Output Voltage Tolerance (RMS)				7.5	mV	RMS
Differential Output Voltage Swing Threshold	*Vout,pp*	300		850	mVpp	
Differential Output Impedance	*Aout*	90	100	110	Ohm	
Termination Mismatch at 1MHz				5	%	
Differential Output Return Loss	See IEEE 802.3ba 86A.4.2.1					10MHz - 11.1GHz
Common mode Output Return Loss	See IEEE 802.3ba 86A.4.2.2					10MHz - 11.1GHz
Output Transition Time		28			ps	20% to 80%
J2 Jitter Tolerance	*Jo2*			0.42	UI	
J9 Jitter Tolerance	*Jo9*			0.65	UI	
Eye Mask Coordinates {X1, X2, Y1, Y2}	0.29, 05 150, 425				UI mV	Hit Ratio = $5x10^{-5}$

Notes:

1. Power-on initialization time is the time from when the power supply voltages reach and remain above the minimum recommended operating supply voltages to the time when the moduleis fully functional.
2. The single ended input voltage tolerance is the allowable range of the instantaneous input signals.

MERAKI COMPATIBLE MA-QSFP-40G-SR4 Optical Characteristics – Transmitter

Parameter	Symbol	Min	Typ	Max	Unit	Notes
Center Wavelength	*λo*		840	850	860	nm
RMS Spectral Width	*Rm*			0.5	0.65	nm
Average Launch Power (each Lane)	*PAVG*	-7.6	-2	+1	dBm	
Optical Modulation Amplitude (OMA) (each Lane)	*POMA*	-5.6		+3	dBm	
Peak Power (each Lane)	*PPt*			+4	dBm	
Launch Power in OMA minus Transmitter and Dispersion Penalty (TDP), each Lane		-6.5			dB	
TDP (each Lane)				3.5	dB	
Extinction Ratio	*ER*	3			dB	
Relative Intensity Noise	*RIN*			-128	dB/Hz	12dB reflection
Optical Return Loss Tolerance				12	dB	
Transmitter Eye Mask Definition {X1, X2, X3, Y1, Y2, Y3}		{0.23, 0.34, 0.43, 0.27, 0.35, 0.4}				
Average Launch Power OFF (each Lane)	*Poff*			-30	dBm	

Note: Transmitter optical characteristics are measured with a single mode fiber.

MERAKI COMPATIBLE MA-QSFP-40G-SR4 Optical Characteristics - Receiver

Parameter	Symbol	Min	Typ	Max	Unit	Notes
Center Wavelength	*λo*	840	850	860	dBm	
Damage Threshold	*Thd*	3.4			dBm	
Average Receive Power (each Lane)		-9.5		+2.4	dBm	
Receiver Reflectance	*RR*			-12	dB	
Receive Power (OMA) (each Lane)				3	dBm	
Receiver Sensitivity in OMA (each Lane)	*SEN*			-5.4	dBm	
Receiver Sensitivity per Channel	*PSens*		-12	-10	dB	
LOS Assert	*LOSA*	-21		-16	dBm	
LOS Deassert	*LOSD*	-19		-13	dBm	
LOS Hysteresis	*LOSH*	0.5			dB	
Receiver Electrical 3dB upper cut-off Frequency (each Lane)	*Fc*			12.3	GHz	

Notes:
1. Even if the TDP < 0.8 dB, the OMA min must exceed theminimum value specified here.
2. The receiver shall be able to tolerate, without damage, continuous exposure to a modulated optical input signal having this power level on

one lane. The receiver does not have to operate correctly at this input power.

3. Measured with conformance test signal at receiver inputfor BER = 1x10-12.
4. Vertical eye closure penalty and stressed eye jitter are test conditions for measuring stressed receiver sensitivity. They are not characteristics of the receiver.

MERAKI COMPATIBLE MA-QSFP-40G-SR4 Digitial Diagnostics Function

The following digital diagnostic characteristics are defined over the normal operating conditions unless otherwise specified.

Parameter	Symbol	Min	Typ	Max	Unit	Notes
Temperature monitor absolute error	*DMITEMP*	-3		3	deg. C	Over operating temperature range
Supply voltage monitor absolute error	*DMIVCC*	-0.1		0.1	V	Over Full operating range
Channel RX power monitor absolute error	*DMIRX_CH*	-2		2	dB	1
Channel Bias current monitor	*DMIIbias_CH*	-10%		10%	mA	
Channel TX power monitor absolute error	*DMITX_CH*	-2		2	dB	1

Note 1: Due to measurement accuracy of different multi-mode fibers, there could be an additional ±1dB fluctuation, or ± 3dB total accuracy.

Mode-Conditioning Patch Cable

Figure 2. shows the orientation of the multi-mode facets of the optical connector

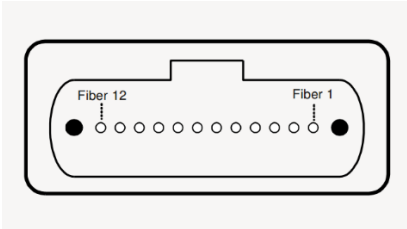

Figure 2 Optical connector

Fiber	Description	PIN	Description
1	Rx (0)	7	Not used
2	Rx (1)	8	Not used
3	Rx (2)	9	Tx (3)
4	Rx (3)	10	Tx (2)
5	Not used	11	Tx (1)
6	Not used	12	Tx (0)

MERAKI COMPATIBLE MA-QSFP-40G-SR4 Optical and Electrical Characteristics

Parameter	Symbol	Min	Typ	Max	Unit
50 / 125 um MMF			300		m
Data Rate			10.3125		Gbps

MERAKI COMPATIBLE MA-QSFP-40G-SR4 Optical and Electrical Characteristics - Transmitter

Parameter	Symbol	Min	Typ	Max	Unit
Centre Wavelength	*C*	840	850	860	nm
Spectral Width (RMS)				0.45	nm
Average Output Power	*Pout*	-6		-1	dBm
Extinction Ratio	*Er*	3.0	5.0		dB
Output Optical Eye	IEEE 802.3-2005 Compliant				
Transmitter Dispersion Penalty	*TDP*			3.9	dB
Input Differential Impedance	*ZIN*	90	100	110	Ω
TX_Disable Assert Time	*t_off*			10	us
TX_DISABLE Negate Time	*t_on*	-	-	1	ms
TX_BISABLE time to start reset	*t_reset*	10	-	-	us
Time to initialize, include reset of TX_FAULT	*t_init*	-	-	300	ms
TX_FAULT from fault to assertion	*t_fault*	-	-	100	us
Total Jitter	*TJ*	-	-	0.28	UI(p-p)
Data Dependant Jitter	*DDJ*	-	-	0.1	UI(p-p)
Uncorrelated Jitter	*UJ*	-	-	0.023	RMS

MERAKI COMPATIBLE MA-QSFP-40G-SR4 Optical and Electrical Characteristics - Receiver

Parameter	Symbol	Min	Typ	Max	Unit
Centre Wavelength	*C*	840	850	860	nm
Receiver Sensitivity	*Pmin*			-11.1	dBm
Output Differential Impedance	*RIN*	90	100	110	Ω
Receiver Overload2	*Pmax*	-1			dBm
Optical Return Loss	*ORL*			-12	dB
LOS De-Assert	*LOSD*			-12.5	dBm
LOS Assert	*LOSA*	25			dBm

LOS Hysteresis		0.5			dB
LOS	High	2.0		VCC+0.3	V
	Low	0		0.8	

PIN Assignment and Function Definitions

PIN Assignment

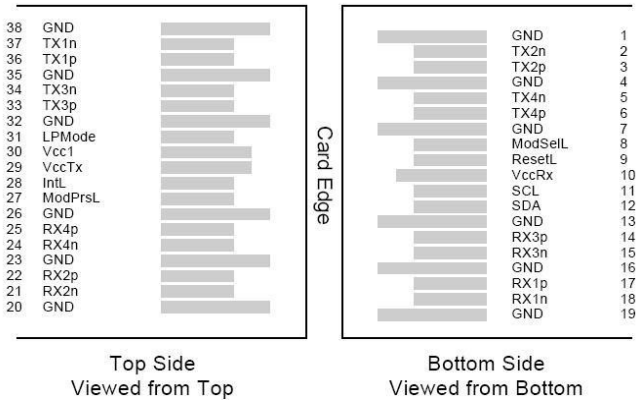

PIN Definition

PIN	Signal Name	Description
1	GND	Ground (1)
2	Tx2n	CML-I Transmitter 2 Inverted Data Input
3	Tx2p	CML-I Transmitter 2 Non-Inverted Data Input
4	GND	Ground (1)
5	Tx4n	CML-I Transmitter 4 Inverted Data Input
6	Tx4p	CML-I Transmitter 4 Non-Inverted Data Input
7	GND	Ground (1)
8	ModSelL	LVTLL-I Module Select
9	ResetL	LVTLL-I Module Reset
10	$VCCR_X$	+3.3V Power Supply Receiver (2)
11	SCL	LVCMOS-I/O 2-Wire Serial Interface Clock
12	SDA	LVCMOS-I/O 2-Wire Serial Interface Data
13	GND	Ground (1)
14	Rx3p	CML-O Receiver 3 Non-Inverted Data Output
15	Rx3n	CML-O Receiver 3 Inverted Data Output
16	GND	Ground (1)
17	Rx1p	CML-O Receiver 1 Non-Inverted Data Output
18	Rx1n	CML-O Receiver 1 Inverted Data Output
19	GND	Ground (1)
20	GND	Ground (1)
21	Rx2n	CML-O Receiver 2 Inverted Data Output

22	Rx2p	CML-O Receiver 2 Non-Inverted Data Output
23	GND	Ground (1)
24	Rx4n	CML-O Receiver 4 Inverted Data Output
25	Rx4p	CML-O Receiver 4 Non-Inverted Data Output
26	GND	Ground (1)
27	ModPrsL	Module Present
28	IntL	Interrupt
29	V_{CC}Tx	+3.3V Power Supply Transmitter (2)
30	V_{CC}1	+3.3V Power Supply
31	LPMode	LVTLL-I Low Power Mode
32	GND	Ground (1)
33	Tx3p	CML-I Transmitter 3 Non-Inverted Data Input
34	Tx3n	CML-I Transmitter 3 Inverted Data Input
35	GND	Ground (1)
36	Tx1p	CML-I Transmitter 1 Non-Inverted Data Input
37	Tx1n	CML-I Transmitter 1 Inverted Data Input
38	GND	Ground (1)

Notes:

1. All Ground (GND) are common within the QSFP+ module and all module voltages are referenced to this potential unless noted otherwise. Connect these directly to the host board signal common ground plane.
2. V_{CC}Rx, V_{CC}1 and V_{CC}Tx are the receiving and transmission power suppliers and shall be applied concurrently. The connector pins are each rated for a maximum current of 500mA.