Juniper Compatible EX-QSFP28-100G-PSM4 Quick Spec:

Part #:	**EX-QSFP28-100G-PSM4** **EX-QSFP28-100G-PSM4-EXT** **EX-QSFP28-100G-PSM4-IND**
Form Factor:	QSFP28
TX Wavelength:	1310nm
Reach:	2km
Cable Type:	SMF
Rate Category:	100GBase
Interface Type:	PSM4
DDM:	Yes
Connector Type:	MPO
Optical Power Budget:	11 dB
TX Power Min/Max:	+2.0 to +4.5 dBm
RX Power Min/Max:	-9.0 to +4.5 dBm

Juniper Compatible EX-QSFP28-100G-PSM4 Features:

- QSFP28 MSA form factor
- Compliant to IEEE 802.3bm 100GBASE PSM4 4 independent full-duplex channels
- Up to 2km reach for G.652 SMF
- Single +3.3V power supply
- Operating Case Temperature
    - Standard 0 to +70 °C
    - Extended -4 to +85 °C
    - Industrial -40 to +85 °C
- Maximum power consumption 3.5W

Juniper Compatible EX-QSFP28-100G-PSM4 Applications:

- 100G Ethernet Links
- Infiniband QDR and DDR interconnects
- Datacenter and Enterprise networking

Juniper Compatible EX-QSFP28-100G-PSM4 Overview

The EX-QSFP28-100G-PSM4 is a parallel 100 Gbps single mode optical transceiver designed for optical communication applications. This product provides increased port density, offering four independent transmit and receive channels. Each channel operates at 25Gbps, resulting in an aggregate data rate of 100Gbps on 2km of single mode fiber. An optical fiber ribbon cable with an MTP/MPO connector can be plugged into the QSFP28 module receptacle. The guide pins inside the receptacle ensure proper alignment. The product is designed with form factor, optical/electrical connection and digital diagnostic interface according to the QSFP28 Multi- Source Agreement (MSA). It has been designed to meet the harshest external operating conditions including temperature, humidity and EMI interference. The module can be managed through the I2C two-wire serial interface. The product is designed with form factor, optical/electrical connection and digital diagnostic interface according to the QSFP28 Multi-Source Agreement (MSA). It has been designed to meet the harshest external operating conditions including temperature, humidity and EMI interference. The module can be managed through the I2C two-wire serial interface.

Juniper Compatible EX-QSFP28-100G-PSM4 Functional Diagram

This product is a QSFP28 parallel single mode optical transceiver with an MTP/MPO fiber ribbon connector. The transmitter module accepts electrical input signals compatible with Common Mode Logic (CML) levels. All input data signals are differential and internally terminated. The receiver module converts parallel optical input signals via a photo detector array into parallel electrical output signals. The receiver module outputs electrical signals are also voltage compatible with Common Mode Logic (CML) levels. All data signals are differential and support a data rates up to 25Gb/s per channel. Figure 1 shows the functional block diagram of this product.

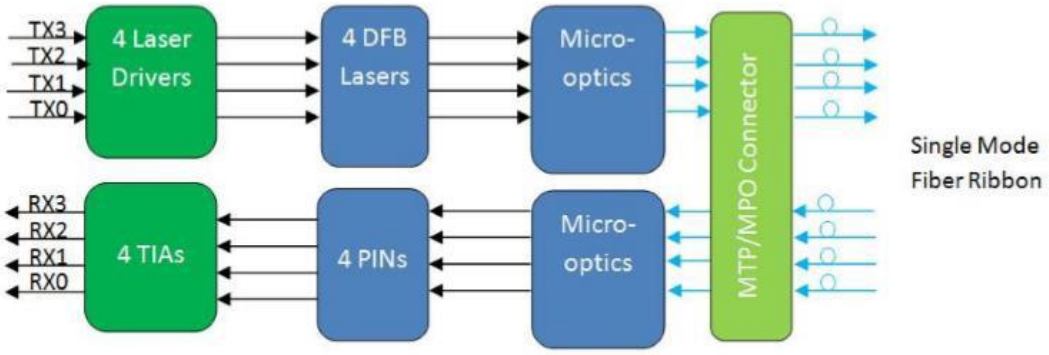

Figure 1. Functional diagram

A single +3.3V power supply is required to power up the module. Both power supply pins VccTx and VccRx are internally connected and should be applied concurrently. Per MSA the module offers 7 low speed hardware control pins (including the 2-wire serial interface): ModSelL, SCL, SDA, ResetL, LPMode, ModPrsLand IntL. Module Select (ModSelL) is an input pin. When held low by the host, the module responds to 2-wire serial communication commands. The ModSelL allows the use of multiple QSFP28 modules on a single 2-wire interfacebus –individual ModSelL lines for each QSFP28 module must be used. Serial Clock (SCL) and Serial Data (SDA) are required for the 2-wire serial bus communication interface and enable the host to access the QSFP28 memory map. The ResetL pin enables a complete module reset, returning module settings to their default state, when a low level on the ResetL pin is held for longer than the minimum pulse length. During the execution of a reset the host shall disregard all status bits until the module indicates a completion of the reset interrupt. The module indicates this by posting an IntL (Interrupt) signal with the Data_Not_Ready bit negated in the memory map. Note that on power up (including hot insertion) the module should post this completion of reset interrupt without requiring are set. Low Power Mode (LPMode) pin is used to set the maximum power consumption for the module in order to protect hosts that are not capable of cooling higher power modules, should such modules be accidentally inserted. Module Present (ModPrsL) is a signal local to the host board which, in the absence of a module, is normally pulled up to the host Vcc. When a module is inserted into the connector, it completes the path to ground through a resistor on the host board and asserts the signal. ModPrsL then indicates a module is present by setting ModPrsLto a“Low” state. Interrupt (IntL) is an output pin. Low indicates a possible module operational fault or a status critical to the host system. The host identifies the source of the interrupt using the 2-wire serial interface. The IntL pin is an open collector output and must be pulled to the Host Vcc voltage on the Host board. This transceiver is specified as ESD threshold 1KV for high speed data pins and 2KV for all others electrical input pins, tested per MIL- STD-883, Method 3015.4 /JESD22-A114-A (HBM). However, normal ESD precautions are still required during the handling of this module. This transceiver is shipped in ESD protective packaging. It should be removed from the packaging and handled only in an ESD protected environment. This is a Class 1 Laser Product according to IEC 60825-1:2007. This product complies with 21 CFR 1040.10 and 1040.11 except for deviations pursuant to Laser Notice No. 50.

Juniper Compatible EX-QSFP28-100G-PSM4 Specifications

Absolute Maximum Ratings

Parameter	Symbol	Min	Max	Unit
Storage Temperature	*Ts*	-40	+85	°C
Operating Case Temp (Standard)	TOP	0	70	°C
Operating Case Temp (Industrial)	TOP	-40	85	°C
Power Supply Voltage	Vcc	-0.5	3.6	V
Relative Humidity (non-condensation)	RH	5	85	%
Damage threshold, each lane	THd	4.5		dBm

Recommended Operating Conditions

Parameter	Symbol	Min	Typ	Max	Unit
Power Supply Voltage	*Vcc*	3.135	3.3	3.465	V
Data Rate, each Lane			25.78125		Gb/s
Control Input Voltage High)		2		Vcc	V
Control Input Voltage Low		0		0.8	V
Link Distance (SM fiber)	D	0.002		2	km

Recommended Power Supply Filter

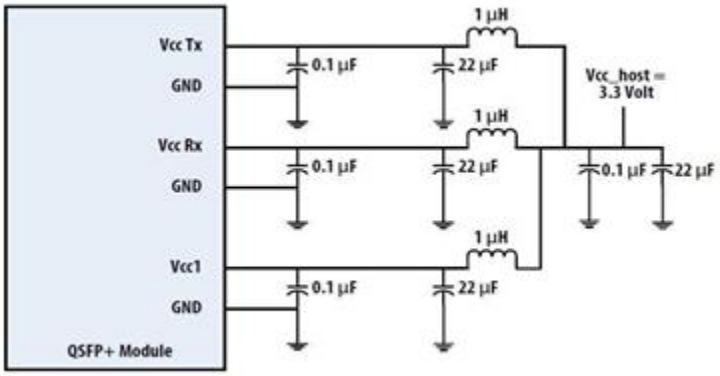

Electrical Characteristics

Parameter	Symbol	Min	Typ	Max	Unit
Power Consumption		-		3.5	W
Supply Current	*Icc*			1.1	A
Transceiver power-on initialization time (note1)				2000	ms

Electrical Characteristics-Transmitter (each lane)

Parameter	Symbol	Min	Typ	Max	Unit
Single-ended input voltage tolerance (note 2)		-0.3		4.0	V
AC common mode input voltage tolerance		15			mV
Differential input voltage swing threshold		50			mVpp
Differential input voltage swing	*Vin.pp*	190		700	mVpp
Differential input impedance	*Zin*	90	100	110	Ω

Electrical Characteristics-Receiver

Parameter	Symbol	Min	Typ	Max	Unit
Single-ended output voltage		-0.3		4.0	V
AC common mode output voltage				7.5	mV
Differential output voltage swing	*Vout.pp*	300		850	mVpp
Differential output impedance	*Zout*	90	100	110	ohm

Notes:

1. Power-on Initialization Time is the time from when the power supply voltages reach and remain above the minimum recommended operating supply voltages to the time when the module is fully functional.
2. The single ended input voltage tolerance is the allowable range of the instantaneous input signals.

Optical Characteristics-Transmitter

Parameter	Symbol	Min	Typ	Max	Unit
Center wavelength	λc	1260	1310	1355	nm
Side Mode Suppression Ratio	SMSR	30			dB
Total average launch power	PT			9.5	dBm
Average launch power, each lane	PAVG	1.0		3.5	dBm
Optical Modulation Amplitude(OMA), each lane (Note)	POMA	2.0		4.5	dBm
Difference in launch power between any two lanes	Ptx,diff			5	dB
Launch power in OMA minus Transmitter and Dispersion Penalty (TDP), each Lane		1.0			dBm
TDP, each lane	TDP			3.2	dB
Extinction Ratio	ER	3.5			dB
Relative Intensity Noise	RIN			-128	dB/Hz
Optical return loss Tolerance	TOL			12	dB
Transmitter reflectance	RT			-12	dB
Average Launch Power OFF Transmitter, each Lane	Poff			-30	dBm
Transmitter Eye Mask Definition {X1, X2, X3, Y1, Y2, Y3}		{0.25, 0.4, 0.45,	0.25, 0.28, 0.4}		

Note: Even if the TDP < 1 dB, the OMA min must exceed the minimum value specified here.

Optical Characteristics-Receiver

Parameter	Symbol	Min	Typ	Max	Unit
Center wavelength	λc	1260	1310	1355	nm
Damage threshold, each lane (note)	THd	4.5			dB
Average receive power, each lane		-9.0		3.5	dBm
Receiver reflectance	RR			-12	dBm
Receiver power (OMA), each lane				4.5	dBm
Receiver sensitivity (OMA), each lane	SEN			-9.0	dB
Difference in receive power between any two lanes (OMA)	Prx,diff			5.5	dBm
LOS Assert	LOSA		-18		dB
LOS Deassert	LOSD		-15		dB
LOS Hysteresis	LOSH	0.5			dB/Hz
Receiver Electrical 3dB upper Cutoff Frequency, each Lane	Fc			31	dB

Note: The receiver shall be able to tolerate, without damage, continuous exposure to a modulated optical input signal having this power level on one lane. The receiver does not have to operate correctly at this input power.

Digital Diagnostic Functions

The following digital diagnostic characteristics are defined over the normal operating conditions unless otherwise specified.

Parameter	Symbol	Min	Typ	Max	Unit	Notes
Temperature monitor absolute error	*DMITEMP*	-3		3	deg. C	Over operating temperature range
Supply voltage monitor absolute error	*DMIVCC*	-0.1		0.1	V	Over Full operating range
Channel RX power monitor absolute error	*DMIRX_CH*	-2		2	dB	1
Channel Bias current monitor	*DMIIbias_CH*	-10%		10%	mA	
Channel TX power monitor absolute error	*DMITX_CH*	-2		2	dB	1

PIN Assignment and Function Definitions

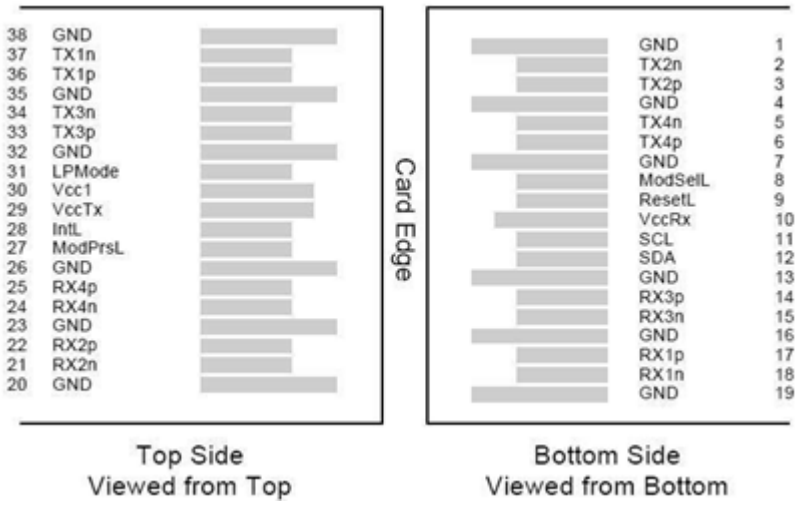

PIN Definition

PIN	Signal Name	Description
1	GND	Ground (1)
2	Tx2n	CML-I Transmitter 2 Inverted Data Input
3	Tx2p	CML-I Transmitter 2 Non-Inverted Data Input
4	GND	Ground (1)
5	Tx4n	CML-I Transmitter 4 Inverted Data Input
6	Tx4p	CML-I Transmitter 4 Non-Inverted Data Input
7	GND	Ground (1)
8	ModSelL	LVTLL-I Module Select
9	ResetL	LVTLL-I Module Reset
10	VCCRx	+3.3V Power Supply Receiver (2)
11	SCL	LVCMOS-I/O 2-Wire Serial Interface Clock
12	SDA	LVCMOS-I/O 2-Wire Serial Interface Data
13	GND	Ground (1)
14	Rx3p	CML-O Receiver 3 Non-Inverted Data Output
15	Rx3n	CML-O Receiver 3 Inverted Data Output
16	GND	Ground (1)
17	Rx1p	CML-O Receiver 1 Non-Inverted Data Output
18	Rx1n	CML-O Receiver 1 Inverted Data Output
19	GND	Ground (1)
20	GND	Ground (1)
21	Rx2n	CML-O Receiver 2 Inverted Data Output
22	Rx2p	CML-O Receiver 2 Non-Inverted Data Output
23	GND	Ground (1)
24	Rx4n	CML-O Receiver 4 Inverted Data Output
25	Rx4p	CML-O Receiver 4 Non-Inverted Data Output
26	GND	Ground (1)
27	ModPrsL	Module Present
28	IntL	Interrupt
29	VCCTx	+3.3V Power Supply Transmitter (2)
30	VCC1	+3.3V Power Supply
31	LPMode	LVTLL-I Low Power Mode
32	GND	Ground (1)
33	Tx3p	CML-I Transmitter 3 Non-Inverted Data Input
34	Tx3n	CML-I Transmitter 3 Inverted Data Input
35	GND	Ground (1)
36	Tx1p	CML-I Transmitter 1 Non-Inverted Data Input
37	Tx1n	CML-I Transmitter 1 Inverted Data Input
38	GND	Ground (1)

Notes:

1. All Ground (GND) are common within the QSFP+ module and all module voltages are referenced to this potential unless noted otherwise. Connect these directly to the host board signal common ground plane.
2. V_{CC}Rx, Vcc1 and V_{CC}Tx are the receiving and transmission power suppliers and shall be applied concurrently. The connector pins are each rated for a maximum current of 500mA.

Licensing

The following U.S. patents are licensed by Finisar to FluxLight, Inc.:
U.S. Patent Nos: 7,184,668, 7,079,775, 6,957,021, 7,058,310, 6,952,531, 7,162,160, 7,050,720