Dell Compatible 407-BBPH Quick Spec:

Part Number:	407-BBPH 407-BBPH-EXT 407-BBPH-IND
Form Factor:	QSFP
TX Wavelength:	850nm
Reach:	400m
Cable Type:	MMF
Rate Category:	40GBase
Interface Type:	eSR4
DDM:	Yes
Connector Type:	MPO
Optical Power Budget:	2.4 dB
TX Power Min/Max:	-7.50 to 1.00 dBm
RX Power Min/Max:	-9.9 to 2.4 dBm

Dell Compatible 407-BBPH Product Features

- 4 independent full-duplex channels
- Up to 11.2 Gbps data rate per wavelength
- MTP/MPO optical connector
- QSFP+ MSA compliant
- Digital diagnostic capabilities
- Up to 300m transmission on OM3 multimode ribbon fiber
- CML compatible electrical I/O
- Single +3.3V power supply
- Operating case temperature:
  - Standard 0 to 70 °C
  - Extended -5 to +85 °C
  - Industrial -40 to +85 °C
- XLPPI electric interface
- Maximum power consumption 1.5W
- RoHS-6 compliant

Dell Compatible 407-BBPH Applications

- Rack to Rack
- Data Center
- Infiniband QDR, DDR and SDR
- 40G Ethernet

Dell Compatible 407-BBPH Overview

The 407-BBPH is a parallel 40 Gbps Quad Small Form-factor Pluggable (QSFP+) optical module. It provides increased port density and total system cost savings. The QSFP+ full-duplex optical module offers 4 independent transmit and receive channels, each capable of 10 Gbps operation for an aggregate data rate of 40 Gbps on 300 meters of OM3 multi-mode fiber. An optical fiber ribbon cable with an MTP/MPO connector can be plugged into the QSFP+ module receptacle. Proper alignment is ensured by the guide pins inside the receptacle. The cable usually can't be twisted for proper channel to channel alignment.

Electrical connection is achieved through a pluggable 38-pin IPASS® connector. The module operates via a single +3.3V power supply. LVCMOS/LVTTL global control signals, such as Module Present, Reset, Interrupt and Low Power Mode, are available with the modules. A 2-wire serial interface is available to send and receive more complex control signals, and to receive digital diagnostic information. Individual channels can be addressed and unused channels can be shut down for maximum design flexibility. The product is designed with form factor, optical/electrical connection and digital diagnostic interface according to the QSFP+ Multi-Source Agreement (MSA). It has been designed to meet the harshest external

operating conditions including temperature, humidity and EMI interference. The module offers very high functionality and feature integration, accessible via a two-wire serial interface.

Dell Compatible 407-BBPH Functional Diagram

This product converts the 4-channel 10 Gbps electrical input data into CWDM optical signals (light), by a driven 4-wavelength Distributed Feedback Laser (DFB) array. The light is combined by the MUX parts as a 40 Gbps data, propagating out of the transmitter module from the SMF. The receiver module accepts the 40 Gbps CWDM optical signals input, and de-multiplexes it into 4 individual 10Gbps channels with different wavelengths. Each wavelength is collected by a discrete avalanche photodiode (APD), and then outputted as electric data after amplified first by a TIA and then by a post amplifier. Figure 1 shows the functional block diagram of this product.

A single +3.3V power supply is required to power up this product. Both power supply pins VccTx and VccRx are internally connected and should be applied concurrently. As per MSA specifications the module offers 7 low speed hardware control pins (including the 2-wire serial interface): ModSelL, SCL, SDA, ResetL, LPMode, ModPrsL and IntL.

Module Select (ModSelL) is an input pin. When held low by the host, this product responds to 2-wire serial communication commands. The ModSelL allows the use of this product on a single 2-wire interface bus – individual ModSelL lines must be used.

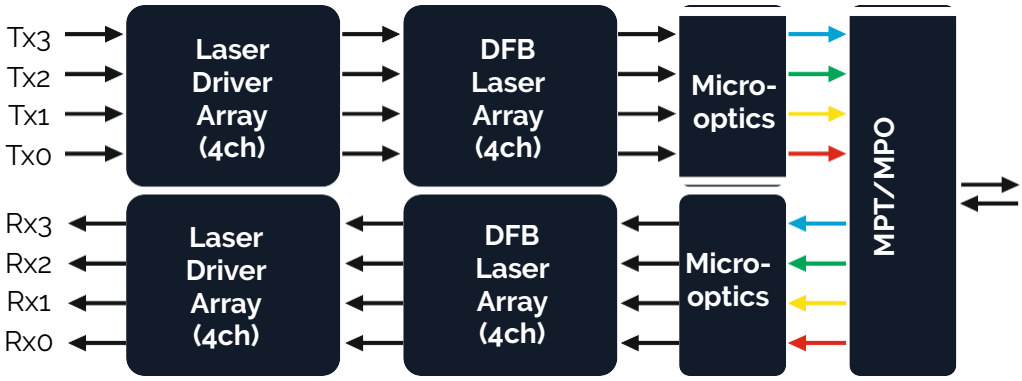

Figure 1. Functional diagram

Serial Clock (SCL) and Serial Data (SDA) are required for the 2-wire serial bus communication interface and enable the host to access the QSFP+ memory map.

The ResetL pin enables a complete reset, returning the settings to their default state, when a low level on the ResetL pin is held for longer than the minimum pulse length. During the execution of a reset the host shall disregard all status bits until it indicates a completion of the reset interrupt. The product indicates this by posting an IntL (Interrupt) signal with the Data_Not_Ready bit negated in the memory map. Note that on power up (including hot insertion) the module should post this completion of reset interrupt without requiring a reset.

Low Power Mode (LPMode) pin is used to set the maximum power consumption for the product in order to protect hosts that are not capable of cooling higher power modules, should such modules be accidentally inserted.

Module Present (ModPrsL) is a signal local to the host board which, in the absence of a product, is normally pulled up to the host Vcc. When the product is inserted into the connector, it completes the path to ground though a resistor on the host board and asserts the signal. ModPrsL then indicates its present by setting ModPrsL to a “Low” state.

Interrupt (IntL) is an output pin. “Low” indicates a possible operational fault or a status critical to the host system. The host identifies the source of the interrupt using the 2-wire serial interface. The IntL pin is an open collector output and must be pulled to the Host Vcc voltage on the Host board.

Absolute Maximum Ratings

Parameter	Symbol	Min	Max	Unit
Storage Temperature	*Ts*	-40	+85	°C
Power Supply Voltage	Vcc	-0.5	3.6	V
Relative Humidity (non-condensation)	*RH*	0	85	%
Damage Threshold, each Lane	*THd*	3.8		dBm

Recommended Operating Conditions

Parameter	Symbol	Min	Typ	Max	Unit
Operating Case Temp (Standard)	*TOP*	0		70	°C
Operating Case Temp (Indsutrial)	*TOP*	-40		85	°C
Power Supply Voltage	*Vcc*	3.135	3.3	3.465	V
Data Rate, each Lane			10.3125	11.2	Gb/s
Control Input Voltage High		2		Vcc	V
Control Input Voltage Low		0		0.8	V
Link Distance with G652	D			30	km

Recommended Power Supply Filter

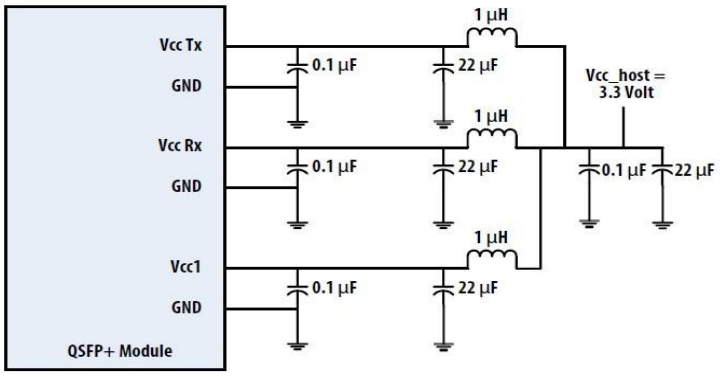

Electrical Characteristics

Parameter	Symbol	Min	Typ	Max	Unit
Power Consumption				1.5	W
Supply Current	*Icc*			450	mA
Transceiver Power-on Initialization Time (Note 1)				2000	ms

Electrical Characteristics – Transmitter (each lane)

Parameter	Symbol	Min	Typ	Max	Unit	Notes
Single-ended Input Voltage Tolerance (Note 2)		-0.3		4.0	V	Referred to TP1 signal common
AC Common Mode Input Voltage Tolerance (RMS)		15			mV	RMS
Differential Input Voltage Swing Threshold		50			mVpp	LOSA Threshold
Differential Input Voltage Swing	*Vin,pp*	180		1200	mVpp	
Differential Input Impedance	*Zin*	90	100	110	Ω	
Differential Input Return Loss		See IEEE 802.3ba 86A.4.1.1			dB	10MHz - 11.1GHz
J2 Jitter Tolerance	*Jt2*	0.17			UI	
J9 Jitter Tolerance	*Jt9*	0.29			UI	
Data Dependent Pulse Width Shrinkage (DDPWS) Tolerance		0.07			UI	
Eye Mask Coordinates {X1, X2, Y1, Y2}		0.11, 0.31 95, 350			UI mV	Hit Ratio = $5x10^{-5}$

Electrical Characteristics – Receiver (each lane)

Parameter	Symbol	Min	Typ	Max	Unit	Notes
Single-ended Output Voltage Threshold		-0.3		4.0	V	Referred to signal common
AC Common Mode Output Voltage Tolerance (RMS)				7.5	mV	RMS
Differential Output Voltage Swing Threshold	*Vout,pp*	600		800	mVpp	
Differential Output Impedance	*Aout*	90	100	110	Ohm	
Termination Mismatch at 1MHz				5	%	
Differential Output Return Loss	See IEEE 802.3ba 86A.4.2.1				dB	10MHz - 11.1GHz
Common mode Output Return Loss	See IEEE 802.3ba 86A.4.2.2				dB	10MHz - 11.1GHz
Output Transition Time		28			ps	20% to 80%
J2 Jitter Tolerance	*Jo2*		0.42		UI	
J9 Jitter Tolerance	*Jo9*		0.65		UI	
Eye Mask Coordinates {X1, X2, Y1, Y2}		0.29, 05			UI	Hit Ratio = $5x10^{-5}$
		150, 425			mV	

Notes:

1. Power-on initialization time is the time from when the power supply voltages reach and remain above the minimum recommended operating supply voltages to the time when the module is fully functional.
2. The single ended input voltage tolerance is the allowable range of the instantaneous input signals.

Optical Characteristics - Transmitter

Parameter	Symbol	Min	Typ	Max	Unit	Notes
Centre Wavelength	λ0	840	850	860	nm	
RMS Spectral Width	Δλrms		0.5	.65	Nm	
Average Launch Power (each Lane)	*PAVG*	-7.5		1.0	dBm	
Optical Modulation Amplitude (OMA) (each Lane)	*POMA*	-2.8		3.0	dBm	1
Difference in Launch Power between any Two Lanes (OMA)	*Ptx,diff*			4.0	dB	
Launch Power in OMA minus Transmitter and Dispersion Penalty (TDP), each Lane	OMATDP	-6.5			dBm	
TDP, each Lane	*TDP*			3.5	dB	
Extinction Ratio	*ER*	3			dB	
Relative Intensity Noise	*RIN*			-128	dB/Hz	12dB reflection
Optical Return Loss Tolerance	*TOL*			12	dB	
Encircled Flux		>86% at 19um<30% at 4.5 um				
Transmitter Eye Mask Definition {X2, X2, X3, Y1, Y2, Y3}		{0.23, 0.35, 0.43, 0.27, 0.35, 0.4}				
Average Launch Power OFF (each lane)	P_{off}			-30	dBm	

Note: Transmitter optical characteristics are measured with a single mode fiber.

Optical Characteristics - Receiver

Parameter	Symbol	Min	Typ	Max	Unit	Notes
Center Wavelength	λ0	840	850	860	nm	
Damage Threshold, each Lane	*THd*	3.4			dBm	3
Average Receive Power, each Lane		-9.9		+2.4	dBm	
Receiver Reflectance	*RR*			-12	dB	
Receive Power (OMA) (each Lane)				3	dBm	
Receiver Sensitivity in OMA (each Lane)	*SEN*			-11.1	dBm	
Stressed Receiver Sensitivity (OMA), each Lane				-7.5	dBm	4
Peak Power (each lane)	*PPR*			4.0	dBm	
LOS Assert	*LOSA*	-30			dBm	
LOS Deassert	*LOSD*			-12	dBm	
LOS Hysteresis	*LOSH*	0.5			dB	
Vertical Eye Closure Penalty, each Lane			1.9		dB	
Stressed Eye J2 Jitter, each Lane			0.3.		UI	
Stressed Eye J9 Jitter, each Lane			0.47		UI	
OMA of each aggressor lane			-0.4		dBm	

Notes:

1. Even if the TDP < 0.8 dB, the OMA min must exceed the minimum value specified here.
2. The receiver shall be able to tolerate, without damage, continuous exposure to a modulated optical input signal having this power level on one lane. The receiver does not have to operate correctly at this input power.
3. Measured with conformance test signal at receiver input for BER = 1x10-12.
4. Vertical eye closure penalty and stressed eye jitter are test conditions for measuring stressed receiver sensitivity. They are not characteristics of the receiver.

Digitial Diagnostics Function

The following digital diagnostic characteristics are defined over the normal operating conditions unless otherwise specified.

Parameter	Symbol	Min	Typ	Max	Unit	Notes
Temperature monitor absolute error	*DMITEMP*	-3		3	deg. C	Over operating temperature range
Supply voltage monitor absolute error	*DMIVCC*	-0.15		0.1	V	Over Full operating range
Channel RX power monitor absolute error	*DMIRX_CH*	-2		2	dB	1
Channel Bias current monitor	*DMIIbias_CH*	-10%		10%	mA	
Channel TX power monitor absolute error	*DMITX_CH*	-2		2	dB	1

Note 1: Due to measurement accuracy of different multi-mode fibers, there could be an additional ±1dB fluctuation, or ± 3dB total accuracy.

Mode-Conditioning Patch Cable

Figure 2. shows the orientation of the multi-mode facets of the optical connector.

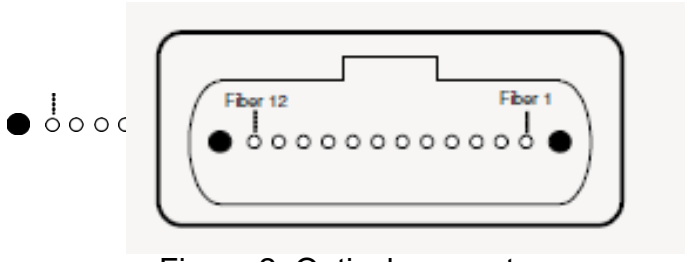

Figure 2. Optical connector

Fiber	Description	PIN	Description
1	Rx (0)	7	Not used
2	Rx (1)	8	Not used
3	Rx (2)	9	Tx (3)
4	Rx (3)	10	Tx (2)
5	Not used	11	Tx (1)
6	Not used	12	Tx (0)

PIN Assignment and Function Definitions

PIN Assignment

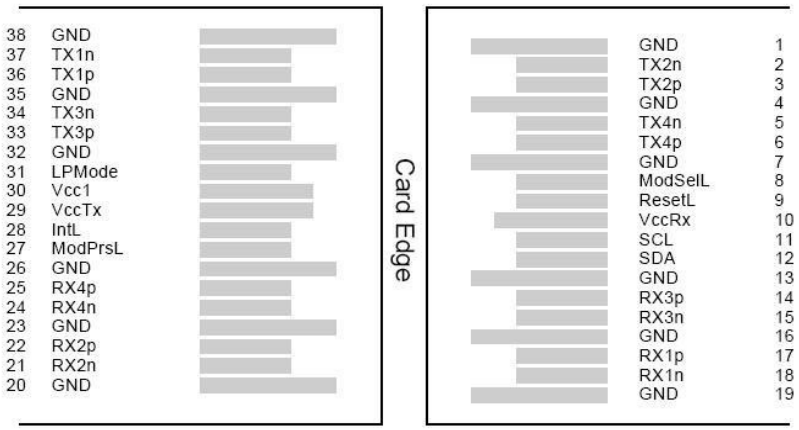

Top Side
Viewed from Top

Bottom Side
Viewed from Bottom

PIN Definition

PIN	Signal Name	Description
1	GND	Ground (1)
2	Tx2n	CML-I Transmitter 2 Inverted Data Input
3	Tx2p	CML-I Transmitter 2 Non-Inverted Data Input
4	GND	Ground (1)
5	Tx4n	CML-I Transmitter 4 Inverted Data Input
6	Tx4p	CML-I Transmitter 4 Non-Inverted Data Input
7	GND	Ground (1)
8	ModSelL	LVTLL-I Module Select
9	ResetL	LVTLL-I Module Reset
10	VCCRx	+3.3V Power Supply Receiver (2)
11	SCL	LVCMOS-I/O 2-Wire Serial Interface Clock
12	SDA	LVCMOS-I/O 2-Wire Serial Interface Data
13	GND	Ground (1)
14	Rx3p	CML-O Receiver 3 Non-Inverted Data Output
15	Rx3n	CML-O Receiver 3 Inverted Data Output
16	GND	Ground (1)
17	Rx1p	CML-O Receiver 1 Non-Inverted Data Output
18	Rx1n	CML-O Receiver 1 Inverted Data Output
19	GND	Ground (1)
20	GND	Ground (1)
21	Rx2n	CML-O Receiver 2 Inverted Data Output
22	Rx2p	CML-O Receiver 2 Non-Inverted Data Output
23	GND	Ground (1)
24	Rx4n	CML-O Receiver 4 Inverted Data Output
25	Rx4p	CML-O Receiver 4 Non-Inverted Data Output
26	GND	Ground (1)
27	ModPrsL	Module Present
28	IntL	Interrupt
29	VCCTx	+3.3V Power Supply Transmitter (2)
30	VCC1	+3.3V Power Supply
31	LPMode	LVTLL-I Low Power Mode
32	GND	Ground (1)
33	Tx3p	CML-I Transmitter 3 Non-Inverted Data Input
34	Tx3n	CML-I Transmitter 3 Inverted Data Input
35	GND	Ground (1)
36	Tx1p	CML-I Transmitter 1 Non-Inverted Data Input
37	Tx1n	CML-I Transmitter 1 Inverted Data Input
38	GND	Ground (1)

Notes:

1. All Ground (GND) are common within the QSFP+ module and all module voltages are referenced to this potential unless noted otherwise. Connect these directly to the host board signal common ground plane.
2. V_{CC}Rx, Vcc1 and V_{CC}Tx are the receiving and transmission power suppliers and shall be applied concurrently. The connector pins are each rated for a maximum current of 500mA.

Licensing

The following U.S. patents are licensed by Finisar to FluxLight, Inc.:
U.S. Patent Nos: 7,184,668, 7,079,775, 6,957,021, 7,058,310, 6,952,531, 7,162,160, 7,050,720