Cisco Compatible QSFP-100G-SR4 Quick Spec:

Part #:	**QSFP-100G-SR4** **QSFP-100G-SR4-EXT** **QSFP-100G-SR4-IND**
Form Factor:	QSFP28
TX Wavelength:	850nm
Reach:	100m
Cable Type:	MMF
Rate Category:	100GBase
Interface Type:	SR4
DDM:	Yes
Connector Type:	MPO
Optical Power Budget:	2.3 dB
TX Power Min/Max:	-8.0 to +2.4 dBm
RX Power Min/Max:	-10.3 to +2.4 dBm

Cisco Compatible QSFP-100G-SR4 Features:

- 4 independent full-duplex channels
- Up to 28Gbps data rate per channel
- QSFP28 MSA compliant
- Up to 100m over OM4 MMF transmission
- Up to 70m over OM3 MMF transmission
- Single 3.3V power supply
- Maximum power consumption 3.5W
- MTP/MPO optical connector
- RoHS-6 compliant
- Operating Case Temperature
    - Standard 0 to +70 °C
    - Extended -4 to +85 °C
    - Industrial -40 to +85 °C
    -

Cisco Compatible QSFP-100G-SR4 Applications:

- Data Center, Rack to rack
- Infiniband QDR, DDR and SDR
- 100G Ethernet

Cisco Compatible QSFP-100G-SR4 Overview

The QSFP-100G-SR4 is a parallel 100 Gbps Quad Small Form-factor Pluggable (QSFP28) optical module. It provides increased port density and total system cost savings. The QSFP28 full-duplex optical module offers 4 independent transmit and receive channels, each capable of 25 Gbps operation for an aggregate data rate of 100 Gbps on 100 meters of OM4 multi-mode fiber. An optical fiber ribbon cable with an MTP/MPO connector can be plugged into the QSFP28 module receptacle. Proper alignment is ensured by the guide pins inside the receptacle. The cable usually cannot be twisted for proper channel to channel alignment. The module operates by a single +3.3V power supply. The product is designed with form factor, optical/electrical connection and digital diagnostic interface according to the QSFP28 Multi-Source Agreement (MSA). It has been designed to meet the harshest external operating conditions including temperature, humidity and EMI interference. The module offers very high functionality and feature integration, accessible via a two-wire serial interface

Cisco Compatible QSFP-100G-SR4 Specifications

Absolute Maximum Ratings

Parameter	Symbol	Min	Max	Unit
Storage Temperature	*Ts*	-40	+85	°C
Operating Case Temp (Standard)	TOP	0	70	°C
Operating Case Temp (Industrial)	TOP	-40	85	°C
Power Supply Voltage	Vcc	-0.5	3.6	V
Relative Humidity (non-condensation)	RH	5	85	%
Damage Threshold, each lane	THd	3.4		dBm

Recommended Operating Conditions

Parameter	Symbol	Min	Typ	Max	Unit
Power Supply Voltage	*Vcc*	3.135	3.3	3.465	V
Data Rate, each Lane			25.78125		Gb/s
Control Input Voltage High)		2		Vcc	V
Control Input Voltage Low		0		0.8	V
Link Distance with G.652	D			100	m

Recommended Power Supply Filter

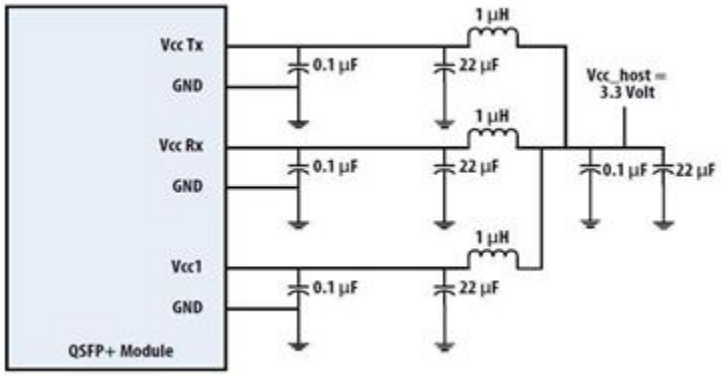

Electrical Characteristics

Parameter	Symbol	Min	Typ	Max	Unit
Power Consumption, each Terminal				3.5	W
Supply Current, each Terminal	*Icc*			1060	mA
Transceiver Power-on Initialization Time				2000	ms

Electrical Characteristics-Transmitter (each lane)

Parameter	Symbol	Min	Typ	Max	Unit	Notes
Differential Input Voltage Swing	*Vin,pp*	150		1050	mVpp	
Differential Input Impedance	*Zin*	85	105	110	Ohm	

Electrical Characteristics-Receiver (each lane)

Parameter	Symbol	Min	Typ	Max	Unit	Notes
Differential Output Voltage Swing	*Vout,pp*	200		1100	mVpp	
Differential Output Impedance	*Aout*	85	100	115	Ohm	

Optical Characteristics-Transmitter

Parameter	Symbol	Min	Typ	Max	Unit	Notes
Signalling Speed per Lane			25.78		Gbps	
Centre Wavelength	$\lambda 0$	840	850	860	nm	
RMS Spectral Width	$\Delta\lambda rms$			0.6	nm	
Average Launch Power (each Lane)	*PAVG*	-9.1		2.4	dBm	
Optical Modulation Amplitude (OMA) (each Lane)	*POMA*			+4	dBm	
Launch Power in OMA minus Transmitter and Dispersion Penalty (TDP), each Lane		-8.0			dBm	
Extinction Ratio	*ER*	3.0			dB	
Optical Return Loss Tolerance	*TOL*			12	dB	
Transmitter Eye Mask Definition {X1, X2, X3, Y1, Y2, Y3}		IEEE 802.3bm 100Gbase-SR4				
Average Launch Power OFF (each Lane)	*Poff*			-30	dBm	

Note: Transmitter optical characteristics are measured with a multimode fiber

Optical Characteristics-Receiver

Parameter	Symbol	Min	Typ	Max	Unit	Notes
Signaling Speed per Lane			25.78		Gbps	
Centre Wavelength	*λ0*	840	850	860	nm	
Damage Threshold (each Lane)	*Thd*	3.4			dBm	3
Average Receive Power (each Lane)		-10.3		+2.4	dBm	
Receiver Reflectance	*RR*			-12	dB	
Stressed Receiver Sensitivity (OMA), each Lane				-5.2	dBm	4
LOS Assert	*LOSA*	-20			dBm	
LOS Deassert	*LOSD*			-12	dBm	
LOS Hysteresis	*LOSH*	0.5			dB	

Digital Diagnostic Functions

The following digital diagnostic characteristics are defined over the normal operating conditions unless otherwise specified.

Parameter	Symbol	Min	Typ	Max	Unit	Notes
Temperature monitor absolute error	*DMITEMP*	-3		3	deg. C	Over operating temperature range
Supply voltage monitor absolute error	*DMIVCC*	-0.1		0.1	V	Over Full operating range
Channel RX power monitor absolute error	*DMIRX_CH*	-2		2	dB	1
Channel Bias current monitor	*DMIIbias_CH*	-10%		10%	mA	
Channel TX power monitor absolute error	*DMITX_CH*	-2		2	dB	1

PIN Assignment and Function Definitions

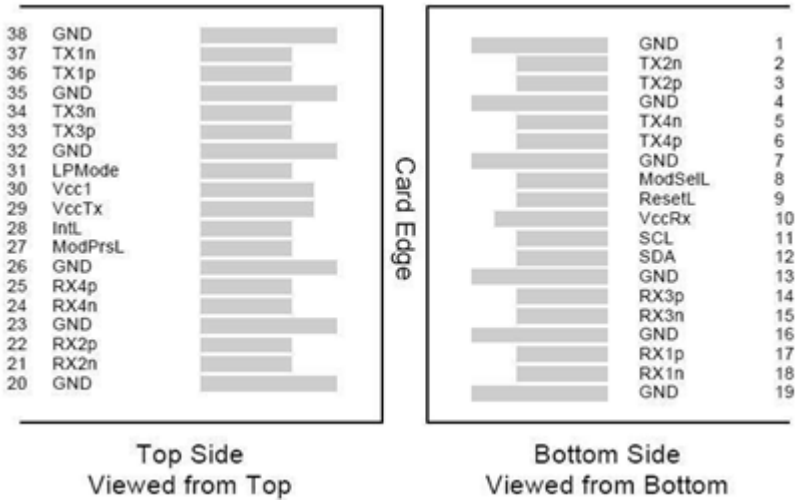

PIN Definition

PIN	Signal Name	Description
1	GND	Ground (1)
2	Tx2n	CML-I Transmitter 2 Inverted Data Input
3	Tx2p	CML-I Transmitter 2 Non-Inverted Data Input
4	GND	Ground (1)
5	Tx4n	CML-I Transmitter 4 Inverted Data Input
6	Tx4p	CML-I Transmitter 4 Non-Inverted Data Input
7	GND	Ground (1)
8	ModSelL	LVTLL-I Module Select
9	ResetL	LVTLL-I Module Reset
10	VCCRx	+3.3V Power Supply Receiver (2)
11	SCL	LVCMOS-I/O 2-Wire Serial Interface Clock
12	SDA	LVCMOS-I/O 2-Wire Serial Interface Data
13	GND	Ground (1)
14	Rx3p	CML-O Receiver 3 Non-Inverted Data Output
15	Rx3n	CML-O Receiver 3 Inverted Data Output
16	GND	Ground (1)
17	Rx1p	CML-O Receiver 1 Non-Inverted Data Output
18	Rx1n	CML-O Receiver 1 Inverted Data Output
19	GND	Ground (1)
20	GND	Ground (1)
21	Rx2n	CML-O Receiver 2 Inverted Data Output
22	Rx2p	CML-O Receiver 2 Non-Inverted Data Output
23	GND	Ground (1)
24	Rx4n	CML-O Receiver 4 Inverted Data Output
25	Rx4p	CML-O Receiver 4 Non-Inverted Data Output
26	GND	Ground (1)
27	ModPrsL	Module Present
28	IntL	Interrupt
29	VCCTx	+3.3V Power Supply Transmitter (2)
30	VCC1	+3.3V Power Supply
31	LPMode	LVTLL-I Low Power Mode
32	GND	Ground (1)
33	Tx3p	CML-I Transmitter 3 Non-Inverted Data Input
34	Tx3n	CML-I Transmitter 3 Inverted Data Input
35	GND	Ground (1)
36	Tx1p	CML-I Transmitter 1 Non-Inverted Data Input
37	Tx1n	CML-I Transmitter 1 Inverted Data Input
38	GND	Ground (1)

Notes:

1. All Ground (GND) are common within the QSFP+ module and all module voltages are referenced to this potential unless noted otherwise. Connect these directly to the host board signal common ground plane.
2. V_{CC}Rx, Vcc1 and V_{CC}Tx are the receiving and transmission power suppliers and shall be applied concurrently. The connector pins are each rated for a maximum current of 500mA.

Licensing

The following U.S. patents are licensed by Finisar to FluxLight, Inc.:
U.S. Patent Nos: 7,184,668, 7,079,775, 6,957,021, 7,058,310, 6,952,531, 7,162,160, 7,050,720