Part Number: CSFP-1000Base-BXD-20km
CSFP-1000Base-BXD-20km-Ind

Quick Spec:

Form Factor:	CSFP
TX Wavelength:	1490nm
Reach:	20km
Cable Type:	SMF
Rate Category:	1000Base
Interface Type:	BX
DDM:	Yes
Connector Type:	Single-LC

1000Base-BXD-20km Overview

FluxLight's 1000Base-BXD-20km-Ind CSFP option2 optical transceivers are based on CSFP MSA standard and provide 2x 1GE BIDI transceivers in one SFP package. The Digital diagnostics functions are available via 2-wire serial bus specified in the SFP MSA.

Product Features

- Up to 1.25 GBd bi-directional data links
- 2 BIDI transceiver in one SFP package
- Duplex LC connector
- Compliant with IEEE 802.3z Gigabit Ethernet
- Compliant with CSFP MSA Option 2
- Hot-pluggable SFP footprint
- 1490nm DFB laser transmitter
- Built-in digital diagnostic functions
- Up to 20km on 9/125um SMF
- Single power supply 3.3V
- RoHS Compliance
- Class 1 laser product complies with EN 60825-1
- Operating temperature range: -40℃ to 85℃.

Applications

- 1.25 GBd Gigabit Ethernet
- 1.063 GBd Fiber Channel

General Specifications

Parameter	Symbol	Min	Typ	Max	Unit	Remarks
Data Rate	*DR*		1.25		GBd	IEEE 802.3
Bit Error Rate	*BER*			10^{12}		
Operating Temp (Standard)	*TOP*	40		85	℃	Case temperature
Operating Temp (Industrial)	*TOP*	40		85	℃	Case temperature
Storage Temperature	*TSTO*	40		85	℃	Ambient temperature
Supply Current	*IS*		270		mA	For electrical power interface
Input Voltage	VCC	3	3.3	3.6	V	
Maximum Voltage	*VMAX*	0.5		4	V	For electrical power interface

OpticalCharacteristics–Transmitter

VCC=3V to 3.6V, TC=-40℃ to 85℃

Parameter	Symbol	Min	Typ	Max	Unit	Remarks
Output Optical Power	PTX	9		3	dBm	Class 1 Product
Optical Center Wavelength	C	1470	1490	1510	nm	
Optical Modulation Amplitude	OMA	174			uW	Equivalent extinction ratio specification for FC
Extinction Ratio	ER	9			dB	
Spectral Width (-20dB)				1	nm	
Side Mode Suppression Ratio	SMSR	30				
Optical Rise/Fall Time (20% - 80%)	TRF_IN		150	260	ps	
Relative Intensity Noise	RIN			120	dB/Hz	
Deterministic Jitter Contribution	TX_DJ		30	60	ps	
Total Jitter Contribution	TX_TJ		60	120	ps	

Optical Characteristics – Receiver

VCC=3V to 3.6V, TC=-40℃ to 85℃

Parameter	Symbol	Min	Typ	Max	Unit	Remarks
Optical Receiver Power	PRX			0	dBm	Average
Optical Center Wavelength	C	1260		1360	nm	
Receiver Sensitivity @ 1.25GBd	RX_SEN2			23	dBm	IEEE 802.3
Optical Return Loss	ORL	14			dB	
Optical Isolation	ISO			40	dB	
Loss of Signal-Asserted	PLOS_A	30			dBm	
Loss of Signal-Deasserted	PLOS_D			24	dBm	
Loss of Signal-Hysteresis		0.5			dB	

ElectricalCharacteristics–Transmitter

VCC=3V to 3.6V, TC=-40℃ to 85℃

Parameter	Symbol	Min	Typ	Max	Unit	Remarks
Input differential impedance	RIN		100		Ω	Non condensing
Single ended data input swing	VIN_PP	250		1200	mV	
Transmit disable voltage	VD	VCC1.3		VCC	V	
Transmit enable voltage	VEN	VEE		VEE+0.8	V	
Transmit disable assert time				10	us	

Electrical Characteristics – Receiver

VCC=3V to 3.6V, TC=-40℃ to 85℃

Parameter	Symbol	Min	Typ	Max	Unit	Remarks
Single ended data output swing	VOUT_PP	300	400	800	mV	
Data output rise/fall time (20%-80%)	TR			300	ps	
LOS Fault	VLOS_Fault	VCC0.5		VCC_HOST	V	
LOS Normal	VLOS_normal	VEE		VEE+0.5	V	

Memory Map

The module provides digital diagnostic information of its operating conditions and status, including transmitting power, laser bias current, module temperature, and supply voltage. Calibration and alarm/warning threshold data are written and stored in internal memory (EEPROM). The memory map is compatible with SFF-8472:

- Maintain single serial control/monitor interface (MOD-DEF1/MOD-DEF2);
- Internal Memory map structure:

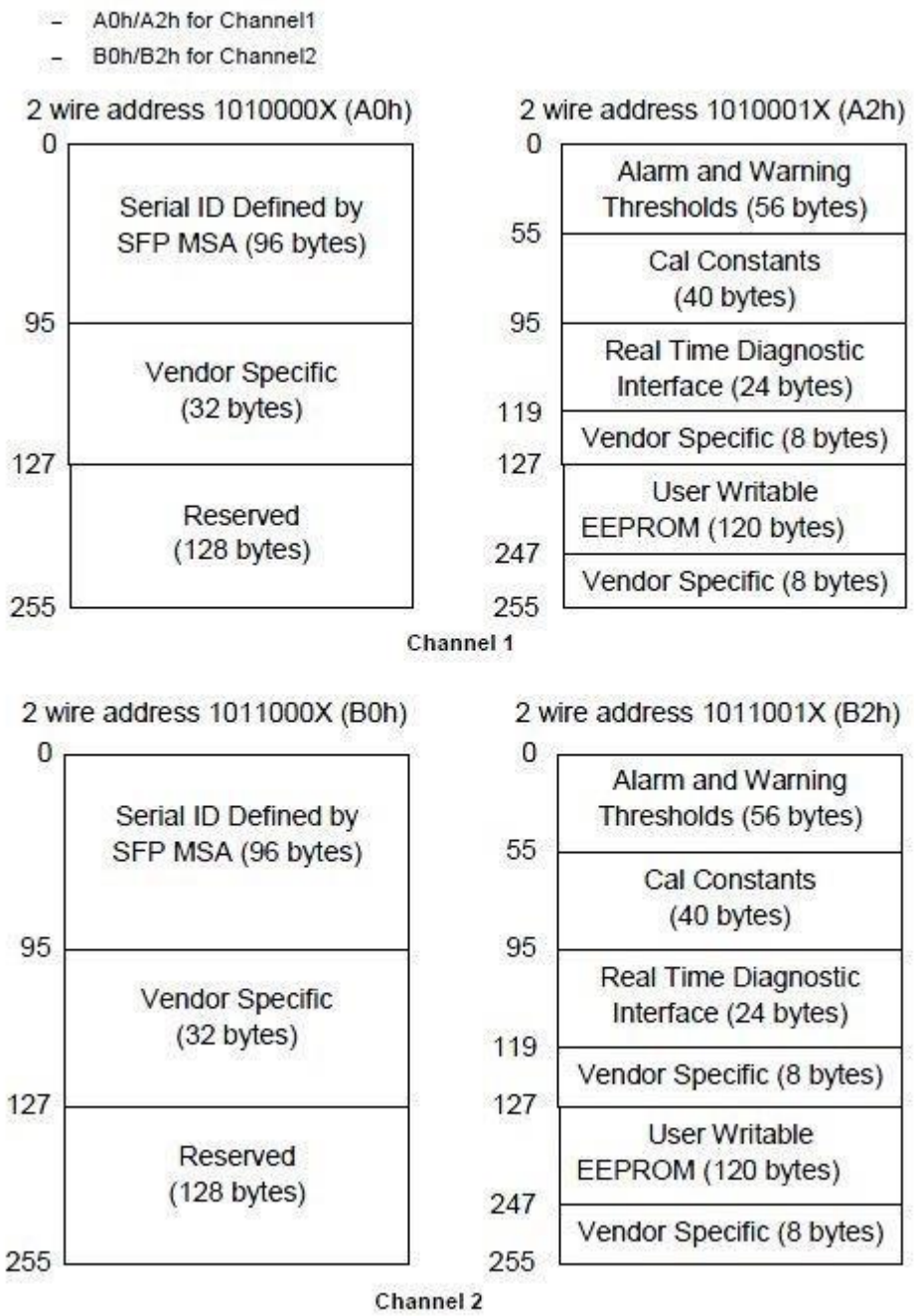

Recommended Design

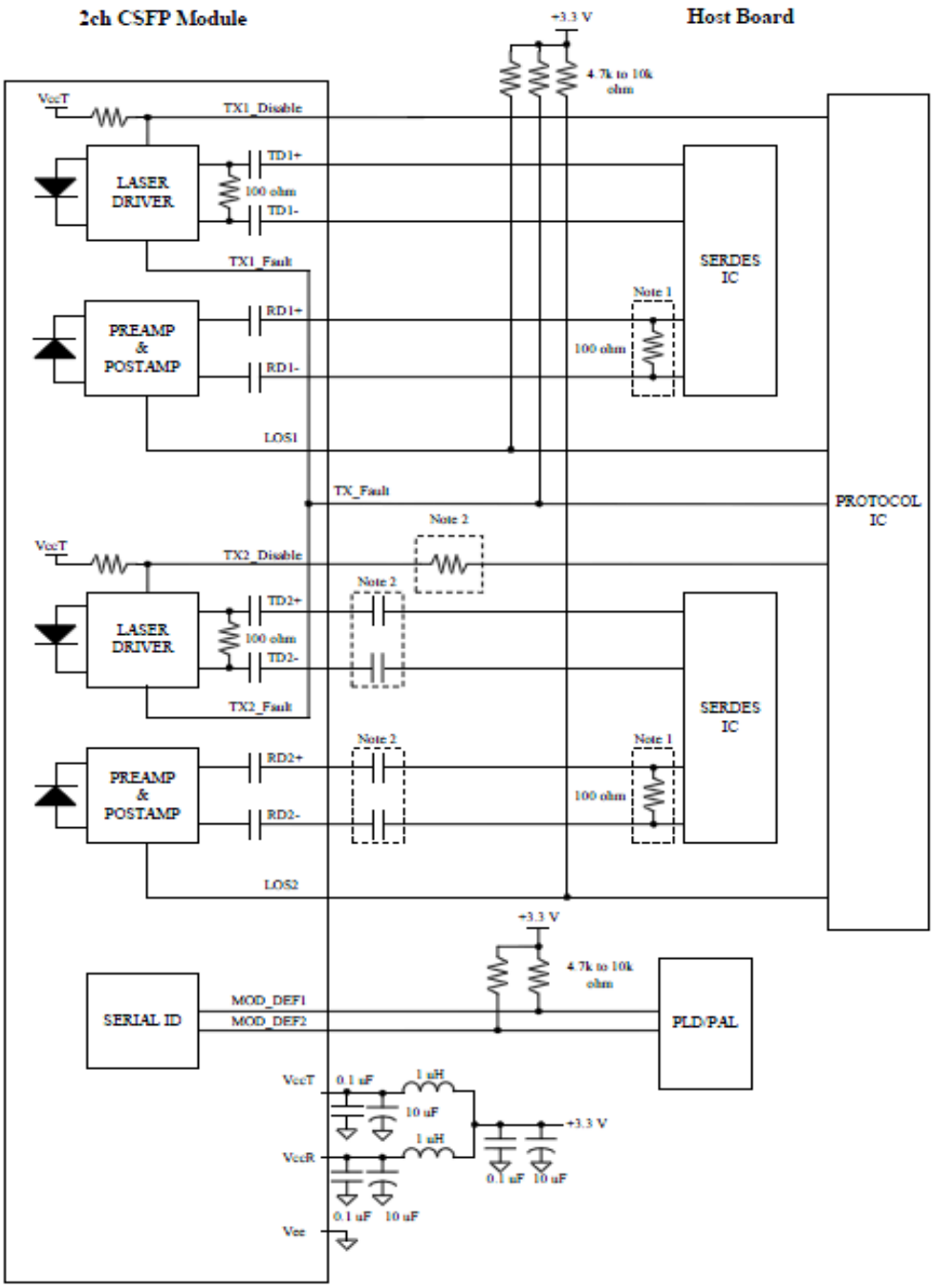

Note 1. Consult the SERDES manufacturer for the termination method.

Note 2. Protections from incorrect insertion are strongly recommended.

Electrical PadLayout

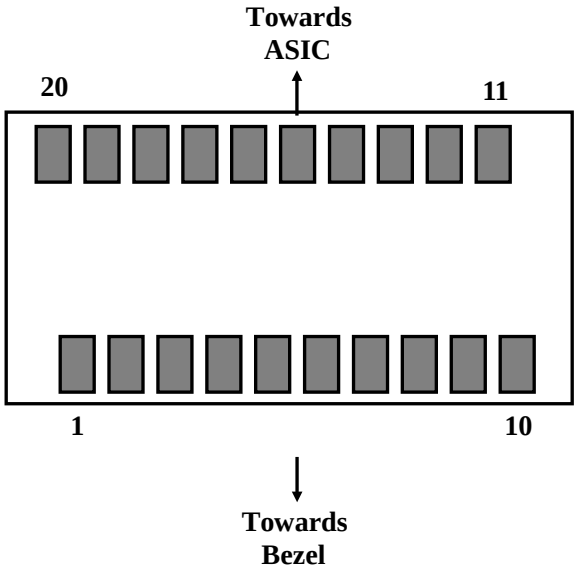

20	Vee
19	TD1-
18	TD1+
17	TX2_Disable
16	VccT
15	VccR
14	LOS2
13	RD1+
12	RD1-
11	Vee

Top of Board

1	Vee
2	TX_Fault
3	TX1_Disable
4	MOD-DEF2
5	MOD-DEF1
6	TD2-
7	TD2+
8	LOS1
9	RD2+
10	RD2-

Bottom of Board
(as view through top of board)

Pin Assignment

PIN #	Symbol	Description	Remarks
1	Vee	Transceiver ground	
2	TX_Fault	Transmitter Fault Indication	
3	TX1_Disable	Transmitter Disable of Ch1; Turns off transmitter laser output of Ch1	Disabled: TDIS>2V or open Enabled: TDIS<0.8V
4	MOD_DEF 2	2-wire Serial interface Data Line (SDA)	
5	MOD_DEF 1	2-wire Serial interface Clock (SCL)	
6	TD2-	Inverted Transmit Data input of CH2	
7	TD2+	Transmit Data input of CH2	
8	LOS1	Loss of Signal for CH1	
9	RD2+	Received Data Output of Ch2	
10	RD2-	Inverted Received Data Output of Ch2	
11	VEE	Transceiver Ground	
12	RD1–	Inverted Received Data Output of Ch1	
13	RD1+	Received Data Output of Ch1	
14	LOS2	Loss of Signal of Ch2	
15	VCCR	Receiver power supply	
16	VCCT	Transmitter power supply	
17	TX2_Disable	Transmitter Disable of Ch2; Turns off transmitter laser output Of Ch2	
18	TD1+	Transmitter Data Input of Ch1	
19	TD1–	Inverted Transmitter Data Input of Ch1	
20	Vee	Transceiver Ground	

References

1. IEEE standard 802.3, IEEE Standard Department, 2008.
2. Compact SFP specification Rev2.0
3. Digital Diagnostics Monitoring Interface for Optical Transceivers – SFF-8472.